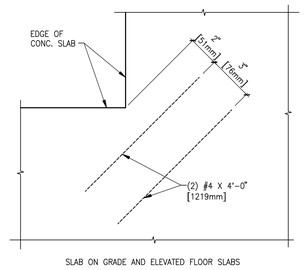

1 REINFORCEMENT AT RE-ENTRANT CORNERS
SCALE: 3" = 1'-0"

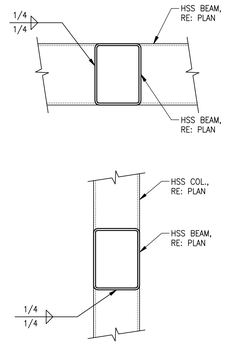

2 HSS TO HSS CONNECTION
SCALE: 1 1/2" = 1'-0"

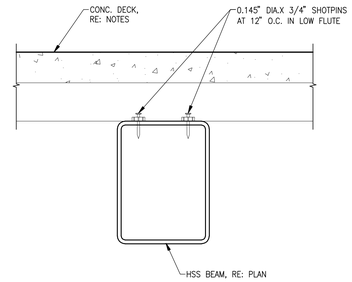

3 DECK ATTACHMENT DETAIL
SCALE: 3" = 1'-0"

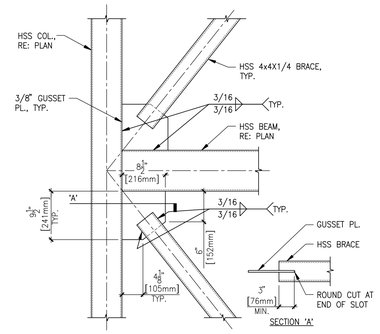

4 BRACE CONNECTION
SCALE: 1" = 1'-0"

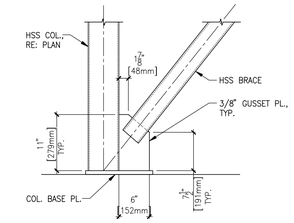

NOTE: SEE DETAIL S3.2-4 FOR GUSSET PL. & HSS BRACE CONN.

5 BRACE CONNECTION
SCALE: 1" = 1'-0"

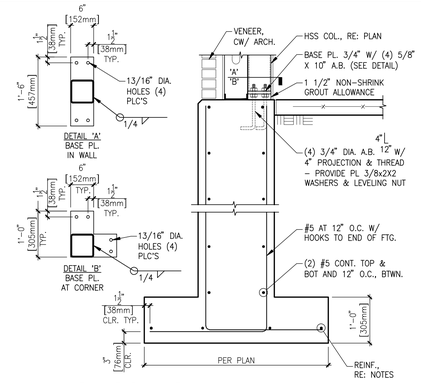

6 FOOTING DETAIL
SCALE: 3/4" = 1'-0"

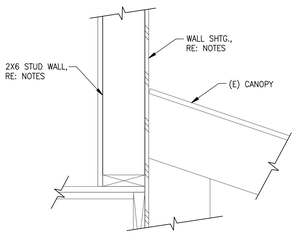

7 FRAMING DETAIL
SCALE: 1 1/2" = 1'-0"

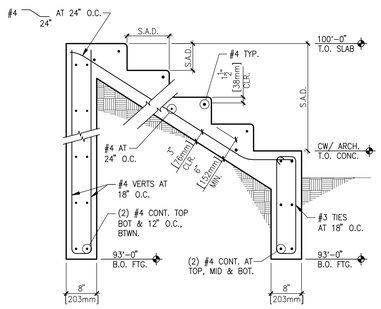

8 STAIRS ON GRADE
SCALE: 3/4" = 1'-0"

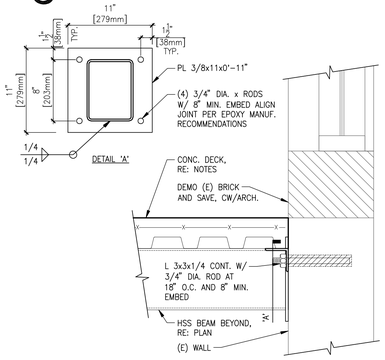

9 BRIDGE TO (E) WALL DETAIL
SCALE: 1 1/2" = 1'-0"

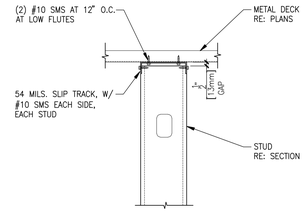

10 SLIP CONNECTION TO METAL DECK
SCALE: 1 1/2" = 1'-0"

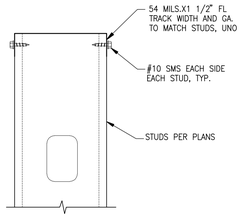

11 TYP. TRACK CLOSURE
SCALE: 3" = 1'-0"

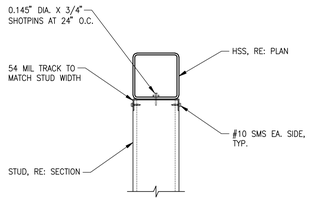

12 STUD TO HSS
SCALE: 1 1/2" = 1'-0"

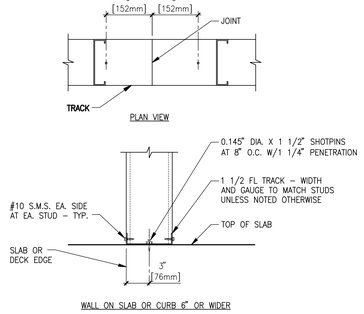

13 TYP. STUD FRAMING DETAIL
SCALE: 1 1/2" = 1'-0"

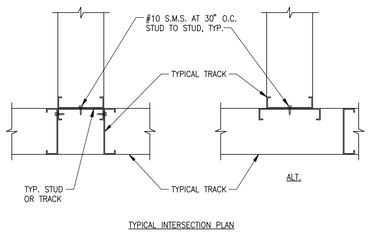

14 TYP. STUD FRAMING DETAIL
SCALE: 1 1/2" = 1'-0"

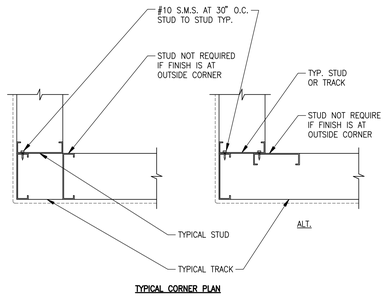

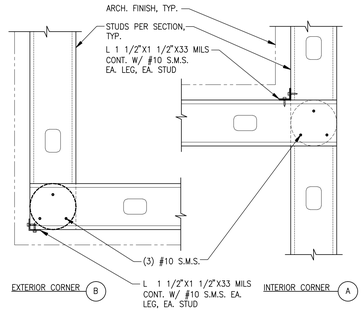

15 TYP. CORNER CLOSURE DTL.
SCALE: 1 1/2" = 1'-0"

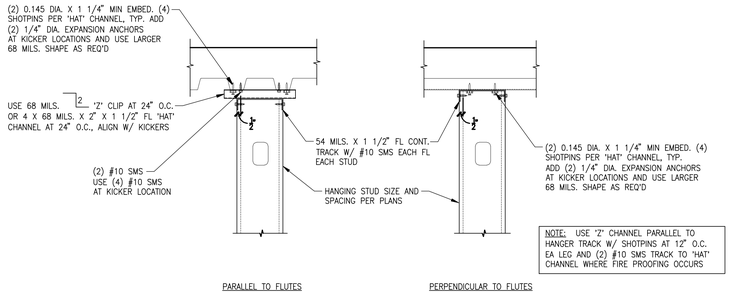

16 STUD BASE TO CONCRETE DECK
SCALE: 1 1/2" = 1'-0"

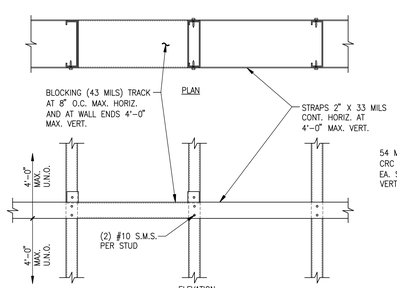

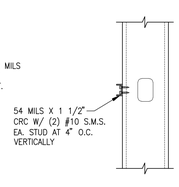

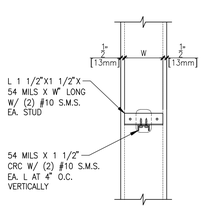

NOTES:
1. PLACE STRAP AND/OR CRC ON SIDE(S) WHERE SHEATHING DOES NOT OCCUR

17 BRIDGING DETAIL
SCALE: 1 1/2" = 1'-0"

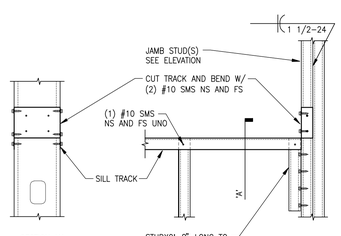

18 SILL TRACK DETAIL
SCALE: 1 1/2" = 1'-0"

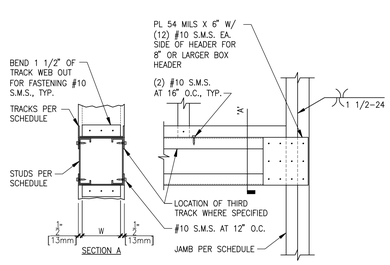

19 BOX HEADER DETAIL
SCALE: 1 1/2" = 1'-0"

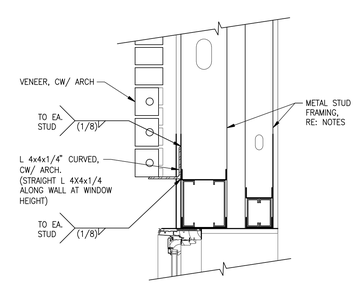

NOTE: SEE A3.1 FOR LOCATIONS OF ANGLE ON WALL.

20 FRAMING DETAIL
SCALE: 1 1/2" = 1'-0"

95% SUBMISSION

REVISIONS | DATE

CSHQA

C.W. MOORE PLAZA
250 S. 5TH ST. • BOISE, ID 83702
(208) 343-4635 • FAX (208) 343-1858
http://www.cshqa.com

DANA M. HENNIS, P.E.
C.W. MOORE PLAZA
250 S. 5TH ST
BOISE, IDAHO
PHONE: 208-343-4635 FAX: 208-343-1858

THESE DRAWINGS AND SPECIFICATIONS, AS INSTRUMENTS OF SERVICE, ARE AND SHALL REMAIN THE PROPERTY OF THE ARCHITECT / ENGINEER WHETHER THE PROJECT FOR WHICH THEY ARE MADE IS EXECUTED OR NOT. THESE DRAWINGS AND SPECIFICATIONS SHALL NOT BE USED BY ANY PERSON OR ENTITY ON OTHER PROJECTS, FOR ADDITIONS TO THIS PROJECT, OR COMPLETION OF THIS PROJECT WHEN PHASED WITHOUT THE WRITTEN CONSENT OF CSHQA OR ITS AFFILIATES. Copyright©2011

STAMP
PRELIMINARY NOT FOR CONSTRUCTION

DRAWING TITLE: STRUCTURAL DETAILS	PROJECT TITLE: VAMC RENOVATE BUILDING 33		DATE: 03/04/11
			PROJECT NO.: 531-10-114
APPROVED: DIVISION CHIEF	BUILDING NUMBER: 33	CHECKED: BA / DRAWN: MG	DRAWING NO.: S3.2
APPROVED: SERVICE DIRECTOR	LOCATION: BOISE, IDAHO		DWG. 53 OF 102

DEPARTMENT OF VETERANS AFFAIRS

Username: mgonzale
May 07, 2014 - 1:41pm
Q:\2009\09004.6\Struc\02_Drawings\Phase 2 – renovations\09004_S3.3.2(ph2).dwg